NATIONAL UNIVERSITY OF TECHNOLOGY ISLAMABAD

DEPARTMENT OF COMPUTER SCIENCE

DIGITAL LOGIC DESIGN LAB

Name	**Bisma Fatima**
Roll No	**F24605036**
Batch	**24**
Section	**A**
Lab Number	**08**
Instructor Name	**Sir Haseeb** **Ma'am Tehreem Khalil**
Date of Submission	**28-April-2025**
Topic Covered	**Implementation and Verification of Multiplexers**

Experiment 8

Implementation and Verification of Multiplexers

Objective

- To experimentally verify the proper operation of a multiplexer.
- To use multiplexer for the implementation of logic functions.
- To understand the benefits of using multiplexer for logic realizations.

Tools/Equipment Requirement

- Logic gate ICs as required
- 8 x 1 MUX IC 74151
- Digital Electronics trainer.

Theoretical Explanation

A multiplexer (MUX) is a device that allows digital information from several sources to be routed onto a single line for a transmission over that line to common destination. The basic multiplexer has several input data lines and a single output line. It also has "data select inputs" which permit digital data on any one of the inputs to be switched to the output line. Multiplexer are also called Data selectors.

The figure below shows a 2 X 1 Multiplexer and a 4 X 1 Multiplexer. Depending on whether S is zero or one, a 2 X 1 Multiplexer chooses A as the output or B as the output respectively. Similarly, depending on the combined value on S1 and S0, the 4 X 1 multiplexer chooses which among the inputs A, B, C, and D is chosen to be passed to the output.

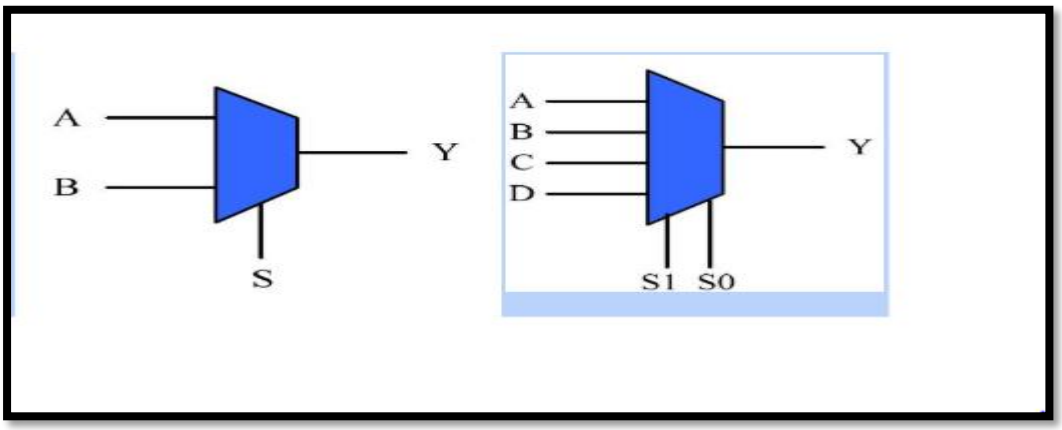

2 X 1 Multiplexer **4 X 1 Multiplexer**

Figure 1

74LS151 is a 8 line-to-1 line multiplexer. It has the schematic representation as shown below. Selection lines S2, S1 and S0 select the particular input to be multiplexed and applied to the output. Strobe S acts as an enable signal. If strobe =1, the chip 74151 is disabled and output y = 0. If strobe = 0 then the chip 74151 is enabled and functions as a multiplexer. The multiplex function of 74151 in terms of select lines is shown in the table below.

Strobe	Select Lines			Output
S	S_2	S_1	S_0	Y
1	X	X	X	0
0	0	0	0	D0
0	0	0	1	D1
0	0	1	0	D2
0	0	1	1	D3
0	1	0	0	D4
0	1	0	1	D5
0	1	1	0	D6
0	1	1	1	D7

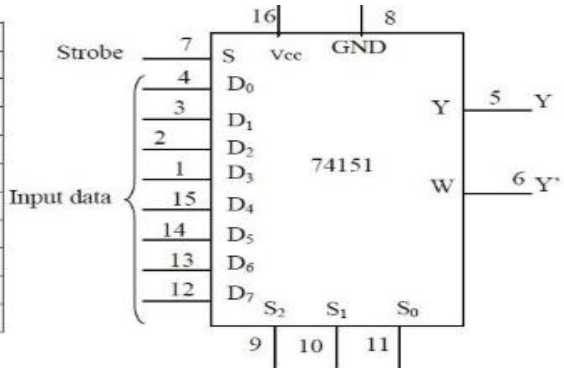

Figure 2

Procedure

Using Multiplexer IC

1. **Make all the connections for 74LS151 as given in the figure above.**

2. **Verify its operation as a multiplexer by applying inputs to pins 1-4 and 12-15.**

- A multiplexer is a device that selects one input signal from multiple options.
- It uses selector lines (S2, S1, S0) to choose which input to pass through.
- Each combination of selector lines picks a specific input (D0 to D7).
- The multiplexer then outputs the signal from the selected input

3. **Record the results in table.**

E	S2	S1	S0	I0	I1	I2	I3	I4	I5	I6	I7	Z	Z'
H	X	X	X	X	X	X	X	X	X	X	X	L	L
L	L	L	L	L	X	X	X	X	X	X	X	L	H
L	L	L	H	H	X	X	X	X	X	X	X	H	L
L	L	H	L	X	L	X	X	X	X	X	X	L	H
L	L	H	H	X	H	X	X	X	X	X	X	H	L
L	H	L	L	X	X	L	X	X	X	X	X	L	H
L	H	L	H	X	X	H	X	X	X	X	X	H	L
L	H	H	L	X	X	X	L	X	X	X	X	L	H
L	H	H	H	X	X	X	H	X	X	X	X	H	L
L	H	L	L	X	X	X	X	L	X	X	X	L	H
L	L	L	H	X	X	X	X	H	X	X	X	H	L
L	H	L	L	X	X	X	X	X	L	X	X	L	H
L	H	L	H	X	X	X	X	X	H	X	X	H	L
L	H	H	L	X	X	X	X	X	X	L	X	L	H
L	H	H	H	X	X	X	X	X	X	H	X	H	L
L	H	H	L	X	X	X	X	X	X	X	L	L	H
L	H	H	H	X	X	X	X	X	X	X	H	H	L

4. Mention the output in terms of input line (as Do, D1 etc.), not the level.

E	S2	S1	S0	Output
H	X	X	X	None (Disabled)
L	L	L	L	D0
L	L	L	H	D1
L	L	H	L	D2
L	L	H	H	D3
L	H	L	L	D4
L	H	L	H	D5
L	H	H	L	D6
L	H	H	H	D7

Using Logic gates

1. Design an 4x1 multiplexer using logic gates.

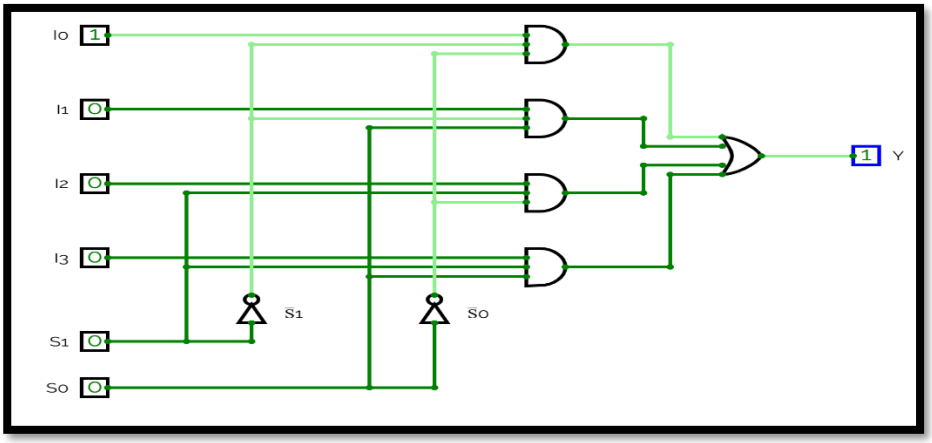

2. **Write down the logic equation of the MUX by solving a truth table.**

Z=(S2S1S0)D0+(S2S1S0)D1+(S2S1S0)D2+(S2S1S0)D3+(S2S1S0)D4+(S2S1S0)D5+(S2S1S0)D6+(S2S1S0)D7

3. **Implement the circuit on digital trainer.**

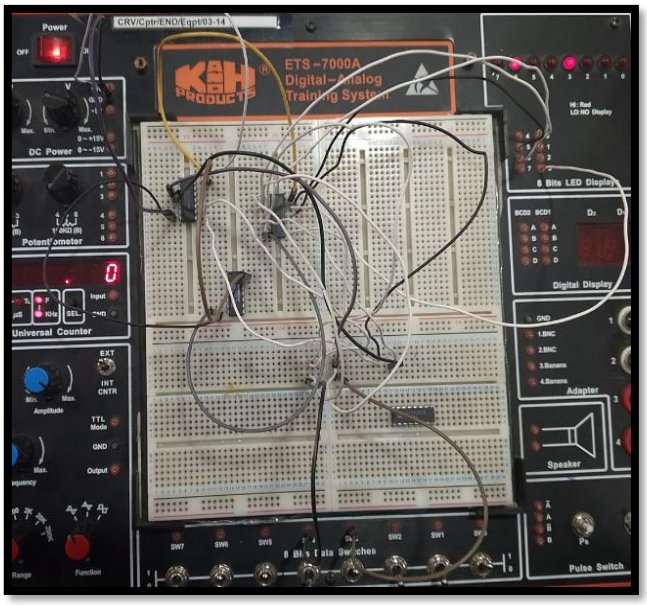

4. **Fill in the results in table.**

<u>Observations/Truth Table</u>

Using Multiplexer IC

Inputs	S2	S1	S0	Z′	Z
A	0	0	0	A′	A
B	0	0	1	B′	B
C	0	1	0	C′	C
D	0	1	1	D′	D
E	1	0	0	E′	E
F	1	0	1	F′	F
G	1	1	0	G′	G
H	1	1	1	H′	H

Using Logic gates

Inputs	S1	S0	Z′	Z
A	0	0	A′	A
B	0	1	B′	B
C	1	0	C′	C
D	1	1	D′	D

Circuit/Logic Diagram
Using Logic gates

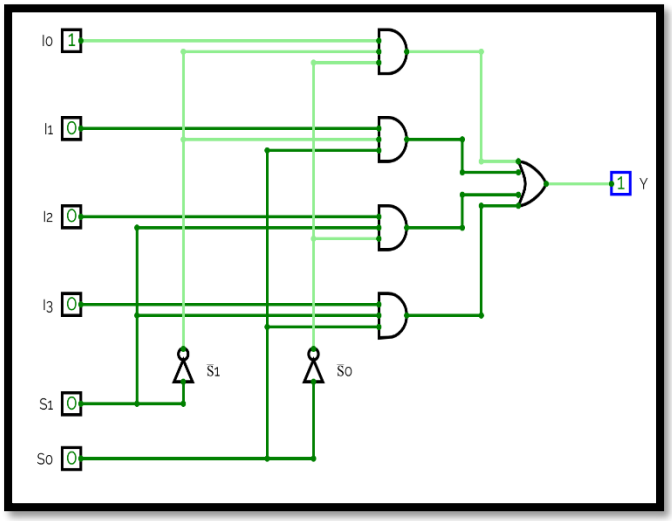

Learning Outcomes:-

- Selecting one output from multiple inputs using selection lines.
- Working like a smart switch based on control signals.
- Built using logic gates.
- Simplifying handling of multiple inputs in digital systems.